Motorized Test Stands

Cycling capabilities enable precise and consistent results!

Shimpo's advanced motorized test stands are designed as companion pieces to our top quality force gauges, providing complete force measurement systems for the most precise testing applications. Their all steel construction makes them remarkably rugged, while programming and cycling capabilities enable them to be highly intelligent. When used with a DFS series gauge, the user has the additional luxuries of storing measurements into the stand's memory and computing statistics at the workstation.

Our motorized test stands are offered in both vertical and horizontal models and are available in a wide range of capacities.

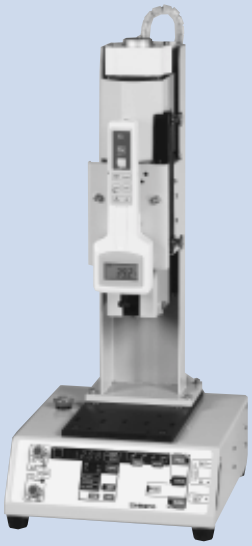

FGS-50PVH motorized test stand (shown with DFS-R)

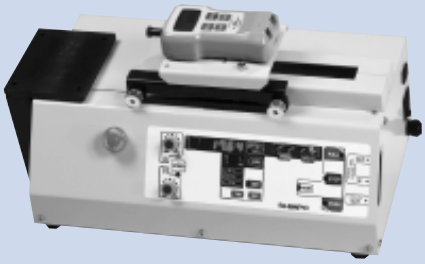

FGS-50PXH horizontal motorized test stand (shown with FGE)

FGS-250VL high-capacity motorized test stand (shown with FGE-H)

Features	Benefits
10 user programmable set points: speed, distance, stop time (all models except FGS-250VL)	Permit custom, automated testing
Single cycle and continuous cycling capabilities (all models except FGS-250VL)	Consistent testing parameters
High and low force set points user selectable through RS232C interface or directly through DFS gauge	Allows test stand to stop at force loads while providing digital displacement readout and digital output
Gauge overload protection (all models except FGS-250VL)	Prevents downtime waiting for repair
Compatibility with nearly all manufacturers' gauges	Enables flexibility in testing applications
All gauge functions can be communicated through stand via RS232 interface (all models except FGS-250VL)	Allows easy computer-programmed operation and downloading of data for SPC programs
Analog distance outputs (all models except FGS-250VL)	Allow graphing and analysis of data
Manually adjustable upper and lower limits	Restricts movement, allowing for precise testing
All steel construction	Solid design contributes to precision movement
Modular design	Reduces cost of stand
Compact design	Reduces weight and minimal surface footprint
Vertical and horizontal models (all models except FGS-250VL)	Suit any application
Standard and low speed models available	For rapid and precise testing applications
One year warranty	Peace of mind

Test Stands

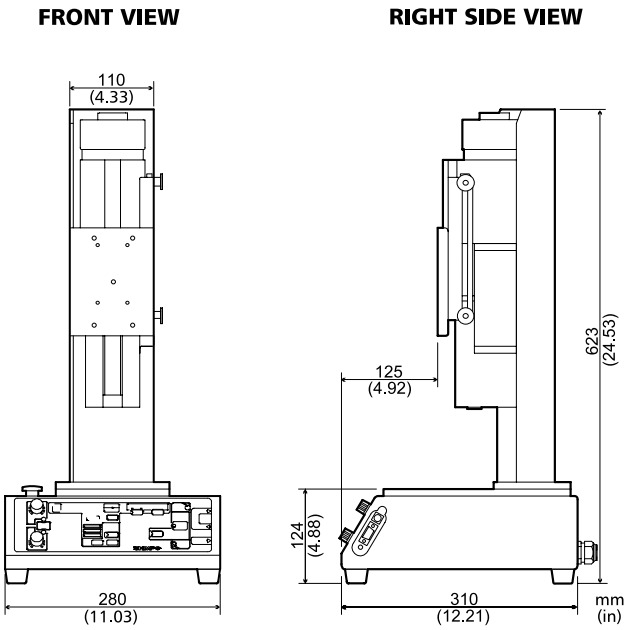

FGS-50PVH/FGS-50PVL

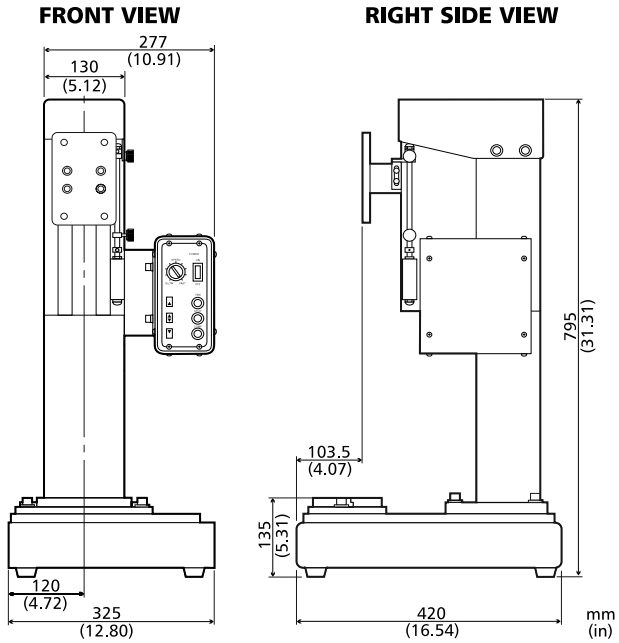

FGS-250VL

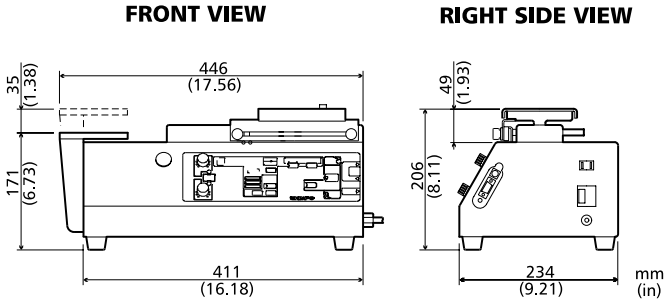

FGS-50PXH/FGS-50PXL

HORIZONTAL & VERTICAL MOTORIZED TEST STAND SPECIFICATIONS				
Model	**FGS-50PXH (horizontal - standard)**	**FGS-50PVH (vertical - standard)**	**FGS-50PXL (horizontal - low speed)**	**FGS-50PVL (vertical - low speed)**
Capacity	110 lb (50 kg)			
Stroke	5.5" (140 mm)			
Vertical Clearance	N/A	2.4"- 7.1" (61-181 mm) 5 steps, 1.18"/step (30 mm/step)	N/A	2.4" - 7.1" (61-181 mm) 5 steps, 1.18"/step (30 mm/step)
Travel Speed	Adjustable: 1.57-15.74"/min (40-400 mm/min)		Adjustable: 0.39-3.93"/min (10-100 mm/min)	
Display	Four digit LED, 0.41" high (10.5 mm). Reads in inches (0.01 resolution) or millimeters (0.1 resolution)			
Power	120 VAC, 60 Hz			
Weight	40 lb (18 kg)	42 lb (19 kg)	40 lb (18 kg)	42 lb (19 kg)

HIGH-CAPACITY MOTORIZED TEST STAND SPECIFICATIONS	
Model	**FGS-250VL**
Capacity	500 lb (250 kg)
Stroke	6" (150 mm)
Vertical Clearance	10.63" (270 mm)
Travel Speed	Adjustable: 0.2" - 2"/min (5-50 mm/min)
Display	Four digit LED, 0.41" high (10.5 mm). Reads in inches (0.01 resolution) or millimeters (0.1 resolution)
Power	120 VAC, 60 Hz
Weight	149 lb (67 kg)

FGS-5S manual test stand (shown with EM)

FGS-50L manual test stand (shown with FGE)

FGS-50H manual test stand (shown with DFS-R)

FGS-250H manual test stand (shown with FGE-H)

Manual Test Stands

Rugged and hand-operated - can be used anywhere!

Our manual force gauge stands are designed for precision, balance and durability and are perfectly suited for measuring a limitless range of materials including wire, springs, plastic, paper cord, tubing, glass and composites.

Shimpo offers two types of manual stands: lever and hand wheel. The lever action is ideal for rapid testing applications; the hand wheel stand is excellent when more precise control is needed. Both the lever and hand wheel stands are available in various capacities and assure accurate, precise and consistent testing results when used in conjunction with our digital FGE, FGV, DFS or mechanical MF and EM force gauges.

Features	Benefits
Compatibility with nearly all manufacturers' gauges	Enables flexibility in replacement of testing system
Versatile bottom mounting plate	Ability to accept even custom-made attachments
Adjustable clearances	Perfect for any size sample
Consistent linear motion	Reliable and accurate measurements
Precision gear movements	Accurate and repeatable results from test to test
Modular design	Reduces cost
Compact design	Reduces weight and surface area footprint
Optional digital length meter	Provides deflection measurements for spring rate testing
Sturdy, all steel construction	Exceptional durability
One year warranty	Peace of mind

Test Stands

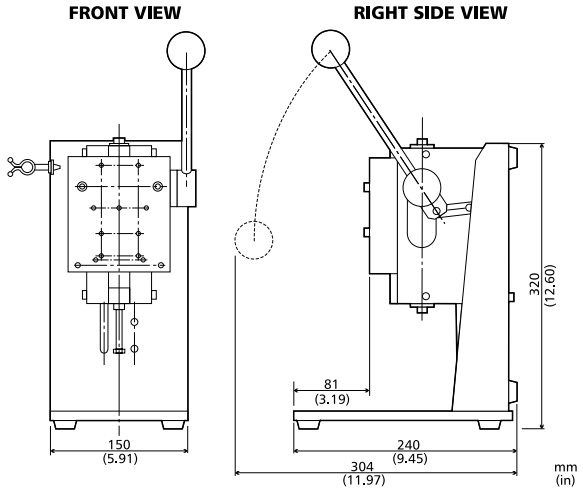

FGS-5S

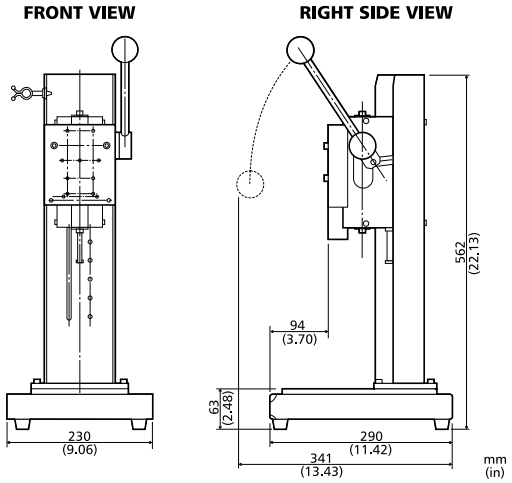

FGS-50L

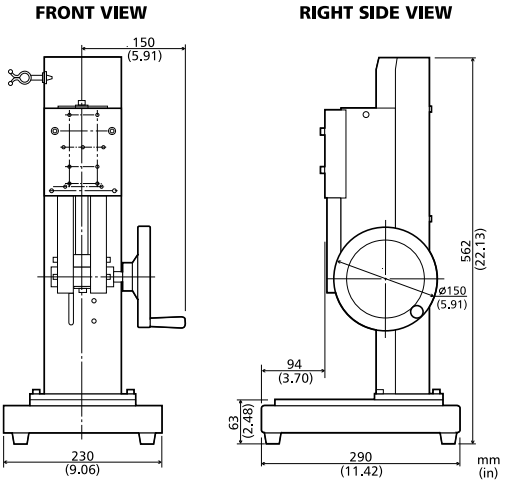

FGS-50H

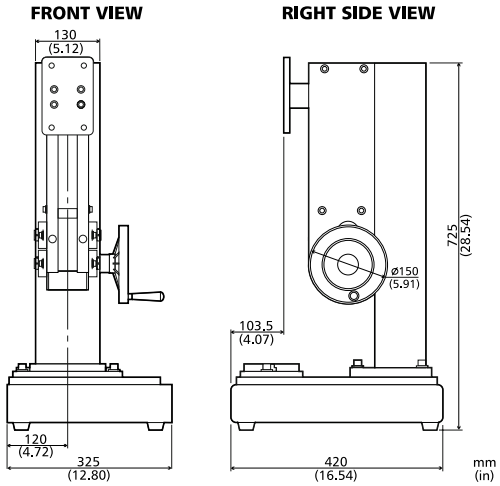

FGS-250H

HORIZONTAL/VERTICAL LEVER TEST STAND SPECIFICATIONS	
Model	**FGS-5S (lever)**
Capacity	50 lb (22 kg)
Stroke	1.97" (50 mm)
Vertical Clearance	1.6", 2.75", 3.94" (40 mm, 70 mm, 100 mm)
Weight	22 lb (10 kg)

VERTICAL TEST STAND SPECIFICATIONS		
Model	**FGS-50L (lever)**	**FGS-50H (hand wheel)**
Capacity	110 lb (50 kg)	
Stroke	1.97" (50 mm)	5.9" (150 mm) 3 mm/wheel turn (approximately)
Vertical Clearance	3.31" - 11.57" (84 mm -294 mm) 8 steps, 1.18"/step (30 mm/step)	2" - 7.95" (52 mm - 202 mm) 6 steps, 1.18"/step (30 mm/step)
Weight	33 lb (15 kg)	

HIGH-CAPACITY VERTICAL HAND WHEEL TEST STAND SPECIFICATIONS	
Model	**FGS-250H**
Capacity	500 lb (250 kg)
Stroke	7.1" (180 mm) 0.25 mm/wheel turn (approximately)
Vertical Clearance	9.17" (233 mm)
Weight	132 lb (60 kg)

Attachments

Shimpo's full line of gauge attachments enables precise and accurate testing results for small and hard-to-hold items. With various width and load capacities available, we offer a wide variety of attachments for all testing requirements.

Attachment	Description	Capacity	
Small Pin Grips FG-M6PIN05 FG-M6PIN1 FG-M6PIN2	Ideal for gripping fine wires and filaments; three ranges for checking samples of .02", .04", .08" (0.5, 1 and 2 mm) thick.	22 lb (11 kg)	
Fine Point Grips FG-M6FPG3 FG-M6FPG8	Perfect for testing fine and medium gauge wire, ribbon,tape and paper. Two jaw widths and load capacities are available; both can handle material thickness up to .04" (1 mm).	30 lb (15 kg) .12" (3 mm) 60 lb (30 kg) .31" (8 mm)	
Film Grips FG-M6FLM20 FG-M6FLM50U	These heavy-duty, spring-loaded grips have serrated jaws for handling samples up to .39" (10 mm) thick and .79" (20 mm) or 1.97" (50 mm) wide.	100 lb (50 kg)	
Jacob's Chuck Grips FG-M6JAC5U	Designed for testing low gauge wire and rigid rods; accepts material diameters from .02" (.05 mm) to .20" (5 mm).	100 lb (50 kg)	
Flat Chuck Tensile Grips FG-M6FTG20U	Each serrated gripping face is .79" (20 mm) square and can accept samples up to .79" (20 mm) thick.	100 lb (50 kg)	
Spool Grips FG-M6SP010U	Ideal for hard-to-hold items like thread, filaments,etc. The sample is wrapped around the spool, anchored by friction.	100 lb (50 kg)	
Tape Grips FG-M6TAP30U	Self-tightening lever action makes this fixture perfect for testing rubber, tape and paper.	100 lb (50 kg)	
Wedge Grips FG-M6WDG50U	Two capacities for lighter and heavier loads; spring-loaded jaws automatically close on the specimen and tighten as tension is applied. Ideal for testing wires, strip material and plastic tape or films.	100 lb (50 kg) 500 lb (250 kg)	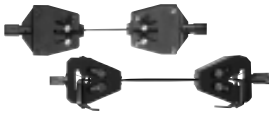
Heavy-Duty Tensile Grip FG-M10TEN7U FG-TEN7B	Manually tightened jaw faces can accept samples 1.25" (31.75 mm) wide and .25" (6.35 mm) thick. Contact faces are serrated hardened tool steel.	500 lb (250 kg)	
Clevis Grips FG-M10CLV10U FG-CLV10B	Odd shaped parts, punched samples or tension springs are easily secured and tested. Concave shape to pins assures centering under load. Throat clearance with pin is .5" (12.7 mm) and can easily accept samples up to .375" (9.65 mm) wide.	500 lb (250 kg)	
Cord and Twine Grips FG-M10TWN500U FG-TWN500B	A unique figure 8 wrap of specimen assures a center break and non-locking pins permit quick installation and release. Throat and pin clearance is .375" (9.65 mm) wide with the throat width being .5" (12.7 mm).	500 lb (250 kg)	
Fabric Grips FG-M10FAB80U FG-FAB80B	Eccentrically mounted, serrated roller grips allow for self-tightening of specimens up to 3" (76.20 mm) wide and .25" (6.4 mm) thick.	500 lb (250 kg)	
Adhesive Test Plates FG-M10ADHE3	Samples up to 3" (76.20 mm) in diameter can be tested with hardened tool steel detachable faceplates. Ball socket mounting screws in both grips assure parallelism and perpendicularity to force when load is applied.	500 lb (250 kg)	
Wire Terminal Test Fixture FG-M6WTER100	Designed specifically to test the strength of wire/terminal connections. The upper grip consists of a self-aligning wheel with nine equally spaced slots of various terminal shank sizes; an eccentrically mounted, self-tightening bottom grip secures the wire on the other end.	100 lb (50 kg)	
Compression Plates	Hardened compression plates available - contact distributor regarding part number and pricing.	100 lb (50 kg) 500 lb (25 kg)	

Accessories

Shimpo offers a variety of sophisticated accessories designed to aid in force gauge measurement and data collection and analysis functions.

Accessory	Description
FG-HANDLE	Fits models FGE, FGV and DFS; 100 lb (50 kg) capacity
MFP-HANDLE	Fits models EM and MF; 100 lb (50 kg) capacity
FGV-CTRLCABLE **DFS-CTRLCABLE**	Protects load cell of force gauge when used with a motorized test stand
FGV-RS232 **DFS-RS232**	Permits communication between force gauge and a PC
FGV-Analog **DFS-Analog**	Facilitates an analog output for recording purposes (amplitude of signal is ±1VDC)
DFS-Comparator	Enables the triggering of an alarm when limits are programmed on the gauge ("Hi, Go and Lo" outputs)
DFS-Digimatic	Allows data transfer to a Mitutoyo data collector
Uni-Plate	Allows other manufacturers' force gauges to be mounted on Shimpo test stands (contact distributor for details)
Model SO-100	Software Wedge™ for Windows® provides a platform for transfering RS232 serial data via keystrokes or DDE to popular programs like Excel®, Lotus®, Access® and FoxPro®. Allows you to add date stamping to data strings.

NOTE: Both an RS232 cable and a CTRLCABLE are required to connect a force gauge to a motorized test stand and computer

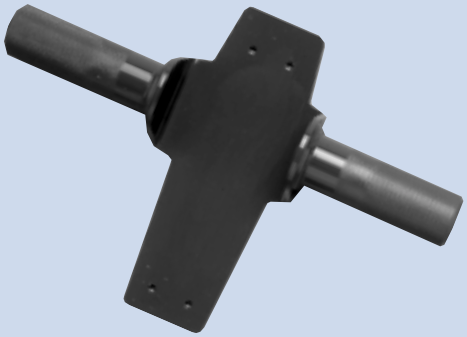

FG-HANDLE

FGV RS232 CABLE

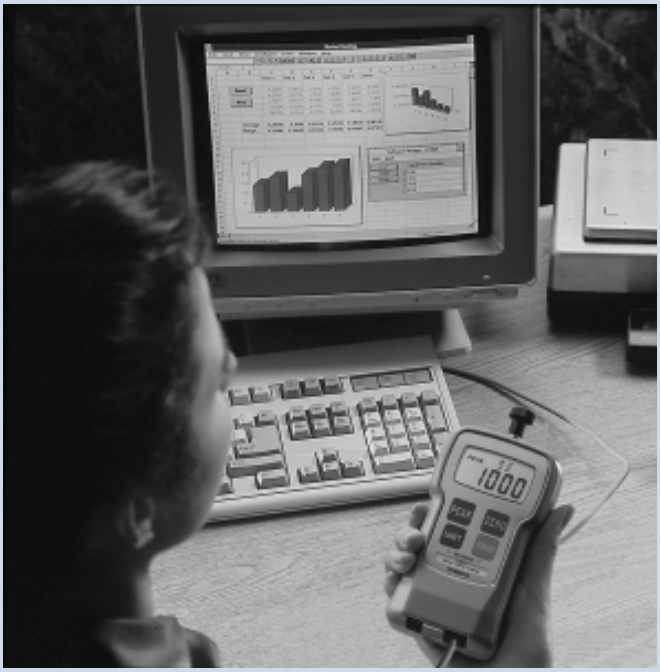

Model SO-100