DWG. SIZE	DWG. NO.
D	031–3260

REVISIONS

SYM.	E.C.N.	DATE	APVD.

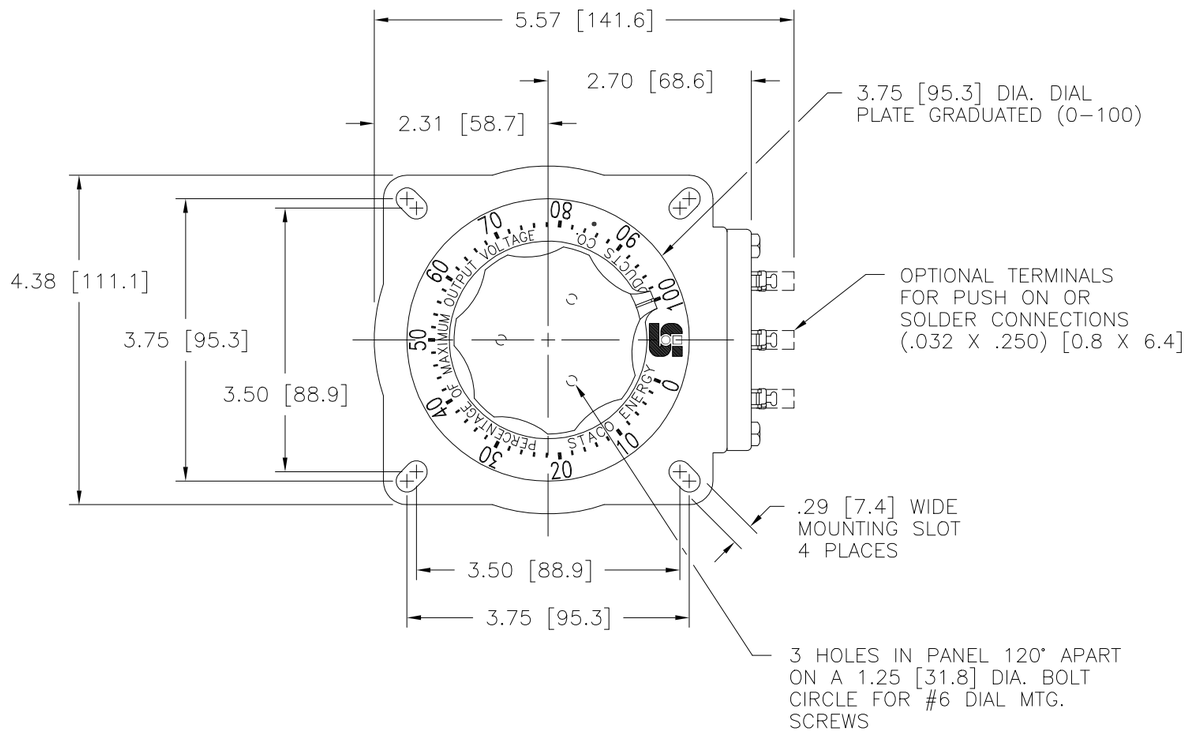

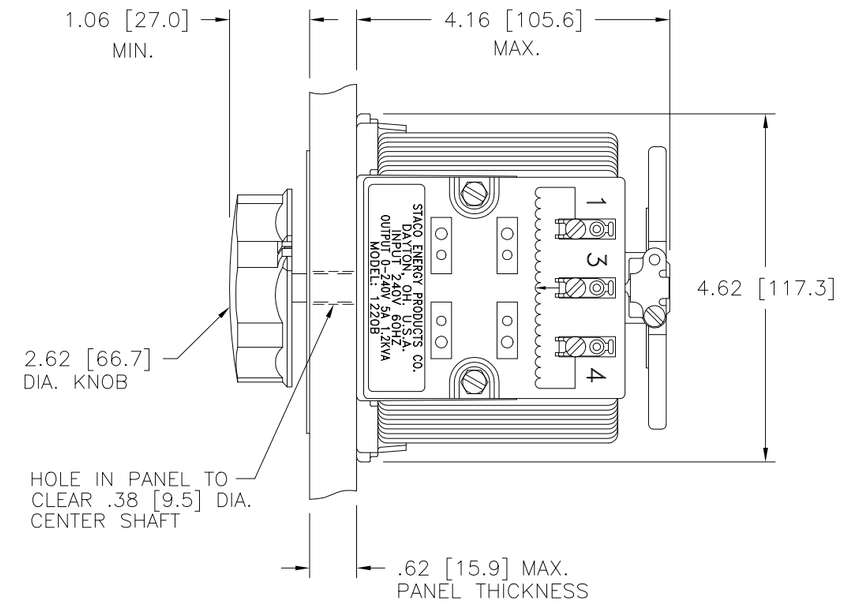

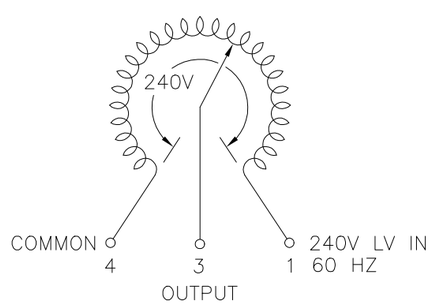

SCHEMATIC
VIEW FROM BASE END
FUSE RECOMMENDED BUT NOT SUPPLIED

SPECIFICATIONS

WIRING	INPUT VOLTS	INPUT HERTZ	OUTPUT VOLTS	CONSTANT CURRENT LOAD MAX. AMPS	CONSTANT CURRENT LOAD MAX. KVA	CONSTANT IMPEDANCE LOAD MAX. AMPS	CONSTANT IMPEDANCE LOAD MAX. KVA	SHAFT ROTATION TO INCREASE VOLTAGE	TERMINAL CONNECTIONS FOR INCREASING VOLTAGE AS VIEWED FROM BASE END: INPUT	JUMPER	OUTPUT
SINGLE PHASE	240	60	0–240	5.0	1.20	7.0	1.68	CW	1–4	———	4–3
								CCW	1–4	———	1–3

UNLESS OTHERWISE SPECIFIED. TOLERANCE IS ±
DECIMALS .XX .03 .XXX .005 HOLES .002 ANGLES 1° DRAFT 1–1/2°

UNITS IN [mm]

ALL DIMENSIONS APPLY AFTER PLATING

MATERIAL :

TITLE: SPEC. CONTROL DRAWING VARIABLE TRANSFORMER MODEL: 1220B

STACO ENERGY PRODUCTS CO.
A COMPONENTS CORPORATION OF AMERICA COMPANY
DAYTON, OHIO U.S.A.

The information and design disclosed herein was originated by and is the property of STACO ENERGY PRODUCTS CO., which reserves all patent, proprietary, design, manufacturing, reproduction, use and sale rights thereto, and to any article disclosed therein except to the extent rights are expressly granted to others. The foregoing does not apply to vendor proprietary parts.

DRAWN BY	DATE	FIRST USED ON	DO NOT SCALE DWG.	CUSTOMER APPROVAL	DATE
S.A. SMITH	9/25/97				
CHECKER	DATE	WEIGHT APPROX. 9 LBS	CODE IDENT. NO. 83006	DWG. SIZE D	DWG. NO. 031–3260
ENGINEER	DATE	SCALE 1=1	SHEET 1 OF 1		